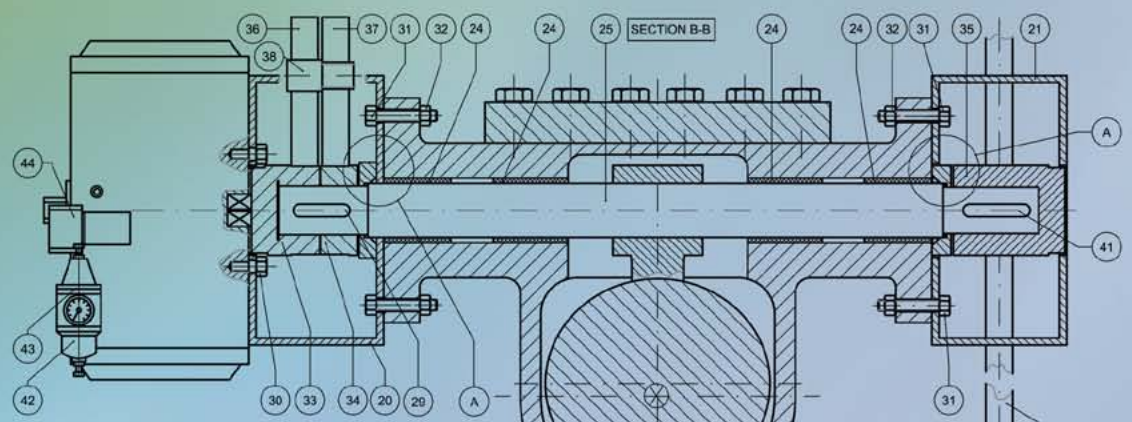

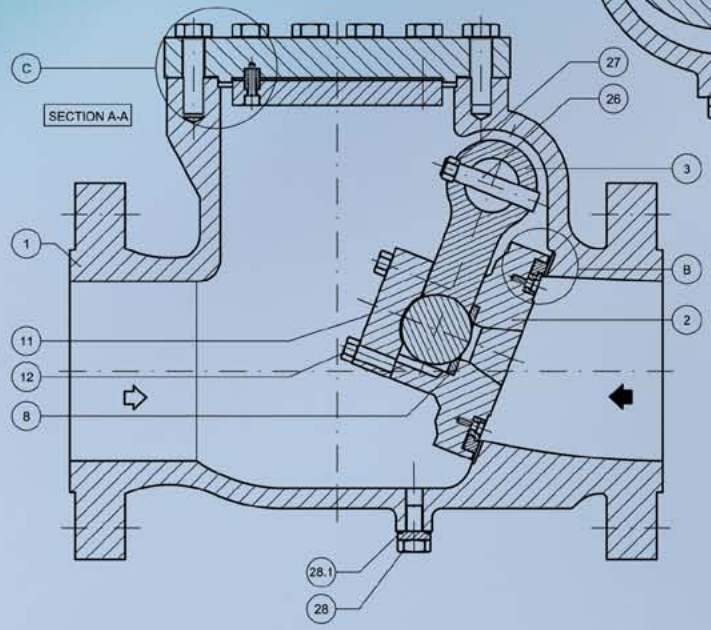

DOUBLE COUNTERWEIGHT DETAIL

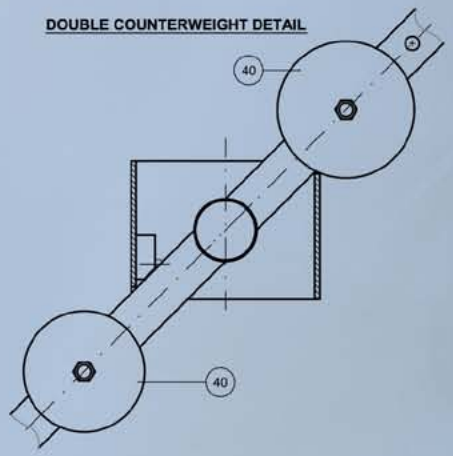

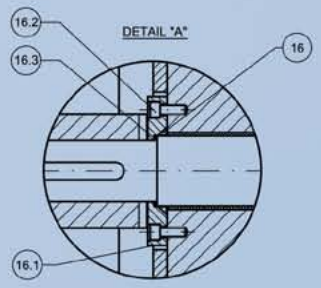

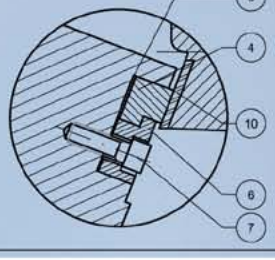

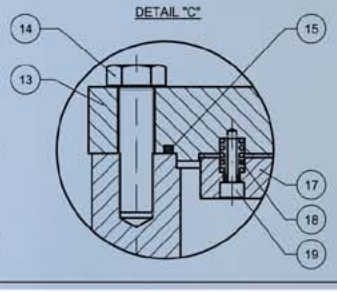

FLOW DIRECTION TO CLOSE

FLOW DIRECTION TO OPEN

	POS.	DESCRIPTION	QTY	MATERIALS /NOTES
	1	BODY	1	
	2	CLAPET	1	
	3	CLAPET ARM	1	
*	4	SEAL SEAT	1	
*	5	SEAL SEAT GASKET	1	
	6	SEAL SEAT RETAINER	1	
	7	SEAL SEAT RET. SCREWS	16	
	8	BLOCKING WASHER	1	
	9	THRUST WASHER	1	
	10	SEAL SURFACE	1	
	11	CLAPET COVER	1	
	12	CLAPET COVER SCREWS	8	
	13	BODY COVER	1	
	14	BODY COVER SCREWS	16	
*	15	BODY COVER GASKET	1	
*	16	STEM SEAL	2	
	16.1	GLAND	2	
	16.2	SCREWS	8	
*	16.3	THRUST WASHER	2	
	17	COVER FLANGE	1	
	18	SPRINGS	8	
	19	COVER FLANGE SCREWS	8	
	20	DISTANCE PIECE	1	
	21	DISTANCE PIECE	1	
	22	DISTANCE PIECE	1	
	23	ADAPTOR	1	
	24	BUSHING	4	
	25	STEM	1	
	26	CONICAL PINS	2	
	27	PIN NUTS	2	
	28	CAP	1	
*	28.1	CAP GASKET	1	
	29	FEATHERS	2	
	30	SCREWS	4	
	31	SCREWS	8	
	32	NUTS	8	
	33	ADAPTOR	1	
	34	ADAPTOR	1	
	35	ADAPTOR	1	
	36	LEVER	1	
	37	LEVER	1	
	38	PIN	1	
	39	COUNTERWEIGHT SHAFT	2	
	40	COUNTERWEIGHT	2	
	41	FEATHER	1	
	42	PNEUMATIC ACTUATOR	1	
	43	AIR INLET REDUCER FILTER	1	
	44	SOLENOID VALVE	1	

* SUGGESTED SPARE PARTS

REV.	DESCRIZIONE	DATA	DIS.	CONTR.
–		–	–	–
–		–	–	–
–		–	–	–

ITALVALV BASALUZZO (AL) ITALY

COMPLESSO: FLANGED SWING CHECK VALVE CF3/M SERIES

DIS. N.: CF3/M–PL01

MATERIALE: /

RICAVATO DA: /

PARTICOLARE: PARTS LIST

DIS.: A.G. DATA: 20/09/07

CONT.: S.M. DATA: 20/09/07

PESO: GREZZO / NETTO /

SCALA: /

N. PEZZI: /

DISEGNO CAD – CAD DRAWING

QUESTO DISEGNO È DI PROPRIETÀ DELLA ITALVALV E NON PUÒ ESSERE COMUNICATO A TERZI , RIPRODOTTO O UTILIZZATO

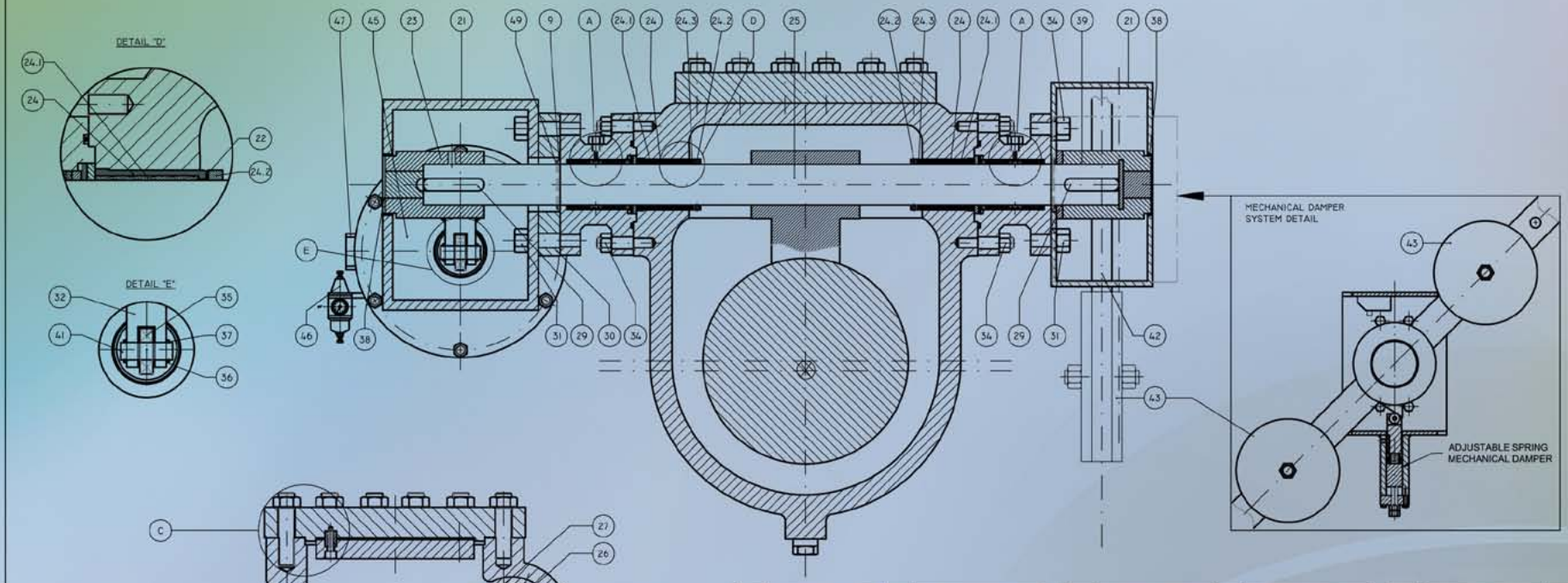

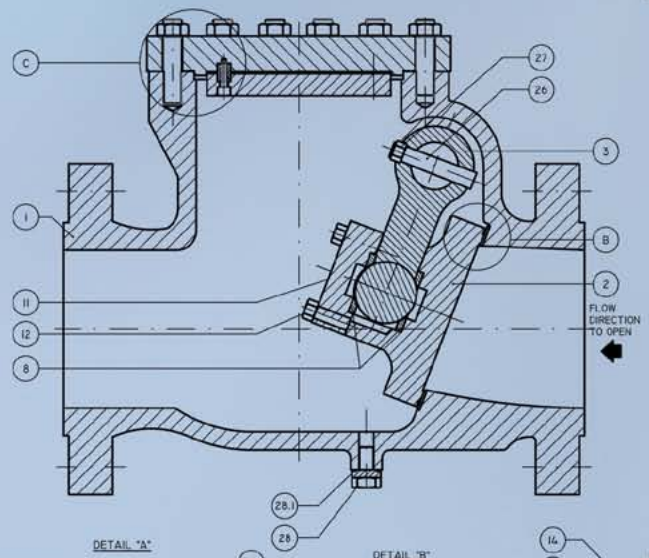

	POS.	DESCRIPTION	QTY	MATERIALS /NOTES
	1	BODY	1	
	2	CLAPET	1	
	3	CLAPET ARM	1	
	4	-	-	
	5	-	-	
	6	-	-	
	7	-	-	
	8	LOCKING WASHER	2	
	9	THRUST WASHER	2	
	10	SEAL SEAT SURFACE	1	
	11	CLAPET COVER	1	
	12	CLAPET COVER SCREWS	8	
	13	BODY COVER	1	
	14	BODY COVER STUD	20	
	14.1	BODY COVER NUT	20	
*	15	BODY COVER GASKET	1	
	16	BODY HUBS	2	
*	16.1	COMPRESSOR RING	2	
	16.2	-	-	
*	16.3	THRUST WASHER	2	
	16.4	BELLEVILLE SPRING	8	

	POS.	DESCRIPTION	QTY	MATERIALS /NOTES
*	16.5	STEM SEAL	2	
*	16.6	SPIRAL WOUND GASKET	2	
	16.7	-	-	
*	16.8	SPACER	2	
	17	COVER FLANGE	1	
	18	SPRINGS	12	
	19	COVER FLANGE SCREWS	12	
	20	-	-	
	21	DISTANCE PIECE	1	
	22	RING	2	
	23	ADAPTOR	1	
	24	BUSHING CONTAINERS	2	
	24.1	BUSHINGS	4	
	24.2	BUSHING RING	2	
	25	STEM	1	
	26	PINS	2	
	27	PIN NUTS	2	
	28	CAP	1	
*	28.1	CAP GASKET	1	
	29	FEATHERS	2	
	30	FLANGE	1	

	POS.	DESCRIPTION	QTY	MATERIALS /NOTES
	31	SCREWS	1	
		ARM	1	
	33	-	-	
	34	SCREWS	16	
	34.1	-	-	
	35	BALL BEARING	1	
	36	THRUST WASHER	2	
	37	SEEGER	1	
	38	BUSHING	2	
	39	ADAPTOR	1	
	40	-	-	
	41	PIN	1	
	42	COUNTERWEIGHT SHAFT	2	
	43	COUNTERWEIGHT	2	
	-	-	-	
	45	PNEUMATIC ACTUATOR	1	
	46	AIR INLET REDUCER FILTER	1	
	47	SOLENOID VALVE	1	
	48	GREASER	2	
	49	SEEGER RING	2	
	-	-	-	

* SUGGESTED SPARE PARTS

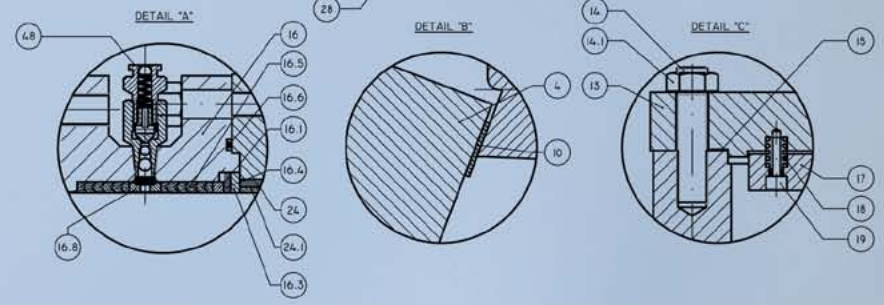

REV.	DESCRIZIONE	DATA	DIS.	CONTR.
–		–	–	–
–		–	–	–
–		–	–	–

ITALVALV BASALUZZO (AL) ITALY

COMPLESSO: FLANGED CHECK VALVE CF6M/AT SERIES

DIS. N.: CF6/AT–PL01

MATERIALE: /

RICAVATO DA: /

PARTICOLARE: PARTS LIST

DIS.: A.G. DATA: 12/05/10

CONT.: S.M. DATA: 12/05/10

PESO: GREZZO / NETTO / SCALA / N. PEZZI /

QUESTO DISEGNO È DI PROPRIETÀ DELLA ITALVALV E NON PUÒ ESSERE COMUNICATO A TERZI, RIPRODOTTO O UTILIZZATO

DISEGNO CAD – CAD DRAWING

ITV

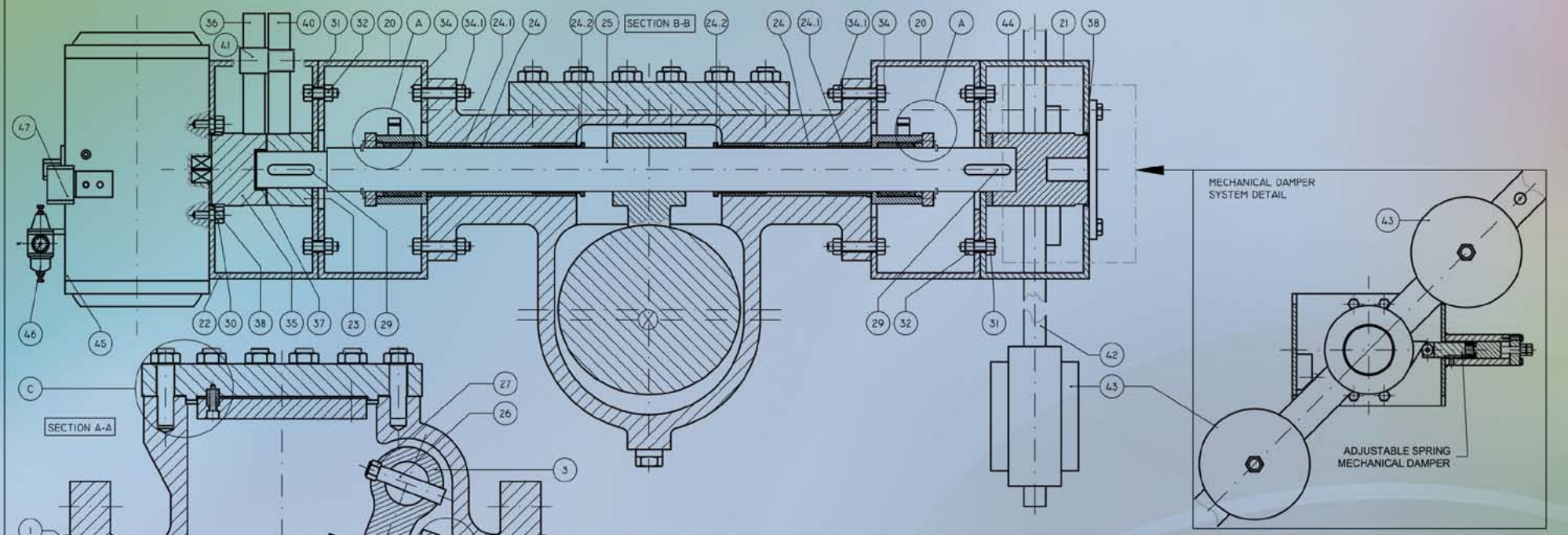

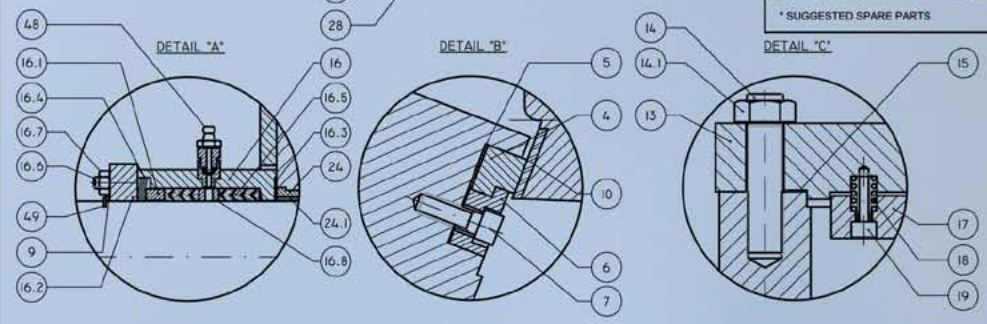

	POS.	DESCRIPTION	QTY	MATERIALS /NOTES
	1	BODY	1	
	2	CLAPET	1	
	3	CLAPET ARM	1	
*	4	SEAL SEAT	1	
*	5	SEAL SEAT GASKET	1	
	6	SEAL SEAT RETAINER	1	
	7	SEAL SEAT RET. SCREWS	16	
	8	BLOCKING WASHER	1	
	9	THRUST WASHER	1	
	10	SEAL SURFACE	1	
	11	CLAPET COVER	1	
	12	CLAPET COVER SCREWS	8	
	13	BODY COVER	1	
	14	BODY COVER STUD	20	
	14.1	BODY COVER NUT	20	
*	15	BODY COVER GASKET	1	
*	16	GLAND PACKING	2	
	16.1	COMPRESSOR RING	2	
	16.2	PACKING FLANGE	2	
*	16.3	PACKING GLAND GASKET	2	
	16.4	BELLEVILLE SPRING	8	

	POS.	DESCRIPTION	QTY	MATERIALS /NOTES
*	16.5	STEM SEAL	2	
	16.6	STUD	16	
	16.7	NUTS	16	
*	16.8	SPACER	2	
		COVER FLANGE	1	
	18	SPRINGS	12	
	19	COVER FLANGE SCREWS	12	
	20	DISTANCE PIECE	2	
	21	DISTANCE PIECE	1	
	22	DISTANCE PIECE	1	
		ADAPTOR	1	
	24	BUSHING CONTAINERS	2	
	24.1	BUSHINGS	4	
	24.2	BUSHING RING	2	
	25	STEM	1	
	26	PINS	2	
	27	PIN NUTS	2	
	28	CAP	1	
*	28.1	CAP GASKET	1	
	29	FEATHERS	2	
	30	SCREWS	4	

POS.	DESCRIPTION	QTY	MATERIALS /NOTES
31	SCREWS	16	
32	NUTS	16	
33	NUTS	4	
34	SCREWS	16	
34.1	NUTS	16	
35	ADAPTOR	1	
36	LEVER	1	
37	BUSHING	1	
38	BUSHING	2	
39	ADAPTOR	1	
40	LEVER	1	
41	PIN	1	
42	COUNTERWEIGHT SHAFT	2	
43	COUNTERWEIGHT	2	
44	ADAPTOR	1	
45	PNEUMATIC ACTUATOR	1	
46	AIR INLET REDUCER FILTER	1	
47	SOLENOID VALVE	1	
48	GREASER	2	
49	SEEGER RING	2	
-	-	-	-

* SUGGESTED SPARE PARTS

REV.	DESCRIZIONE	DATA	DIS.	CONTR.
–		–	–	–
–		–	–	–
–		–	–	–

ITALVALV BASALUZZO (AL) ITALY

COMPLESSO: FLANGED SWING CHECK VALVE
CF9/AT SERIES

DIS. N.: CF9/AT–PL01

MATERIALE: /

RICAVATO DA: /

PARTICOLARE: PARTS LIST

DIS.: A.G. DATA: 17/04/07
CONT.: S.M. DATA: 17/04/07

PESO: GREZZO / NETTO / SCALA / N. PEZZI /

QUESTO DISEGNO È DI PROPRIETÀ DELLA ITALVALV E NON PUÒ ESSERE COMUNICATO A TERZI , RIPRODOTTO O UTILIZZATO

DISEGNO CAD – CAD DRAWING

ITV